3D Printing: a Rookie's Perspective

Bytes of Kitkats(FTC Team# 11089)

Like us on Facebook @ Bytes of Kitkats

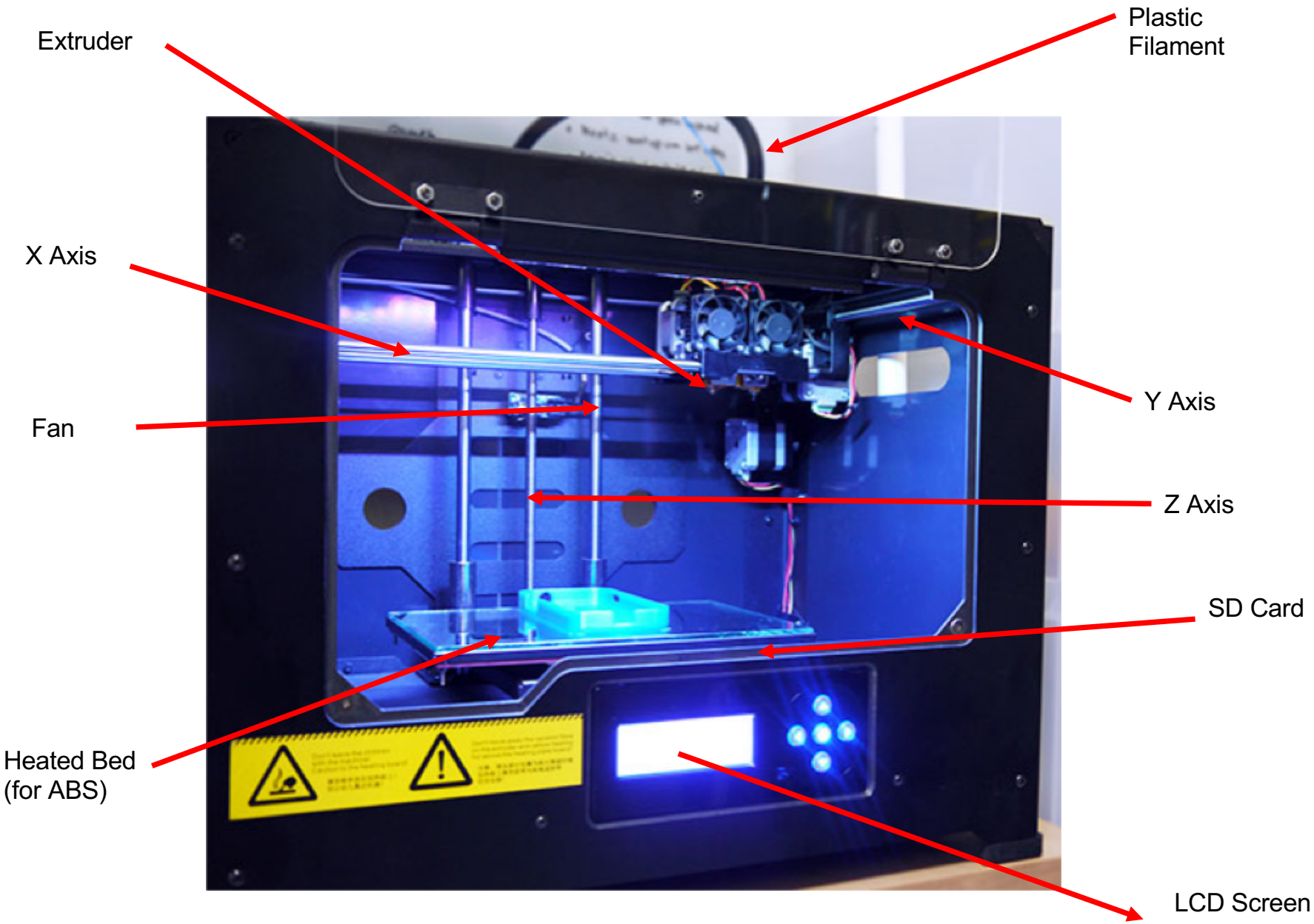
Extruder
Plastic Filament
X Axis
Fan
Y Axis
Z Axis
SD Card
Heated Bed (for ABS)
LCD Screen

What is 3D printing?

- It is the process by which a digital file is turned into real life, 3D object.
- 3D printers can print with many different kinds of material, including **metal** and **plastic**
- There are many kinds of printing methods, the most common one is **FDM**(Fused Deposition modeling)

FDM:

- Hot end ejects melted plastic.(1)
- Deposited plastic cools to form a shape.(2)
- Bed moves.(3)

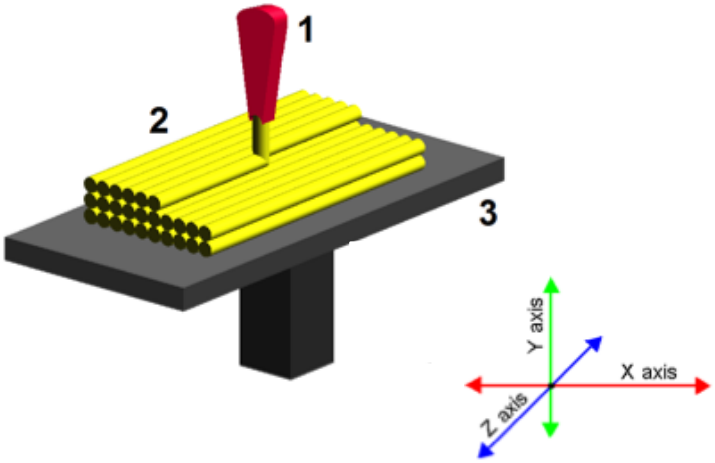

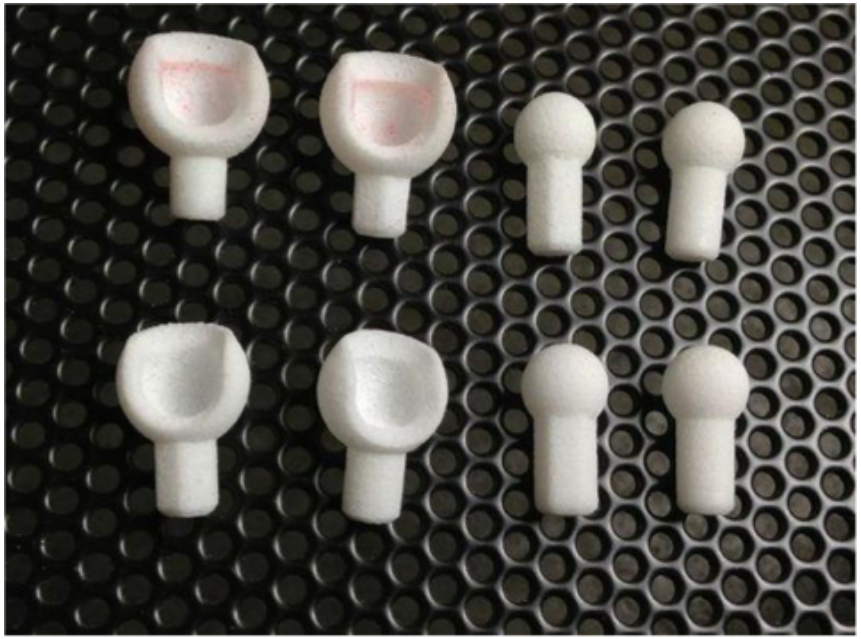

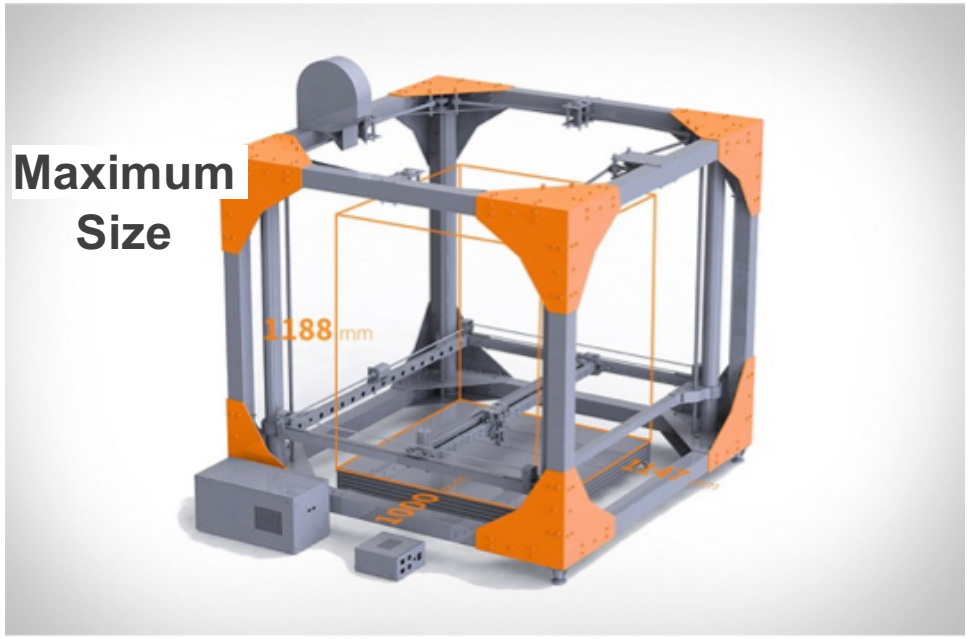
Maximum
Size
1188 mm

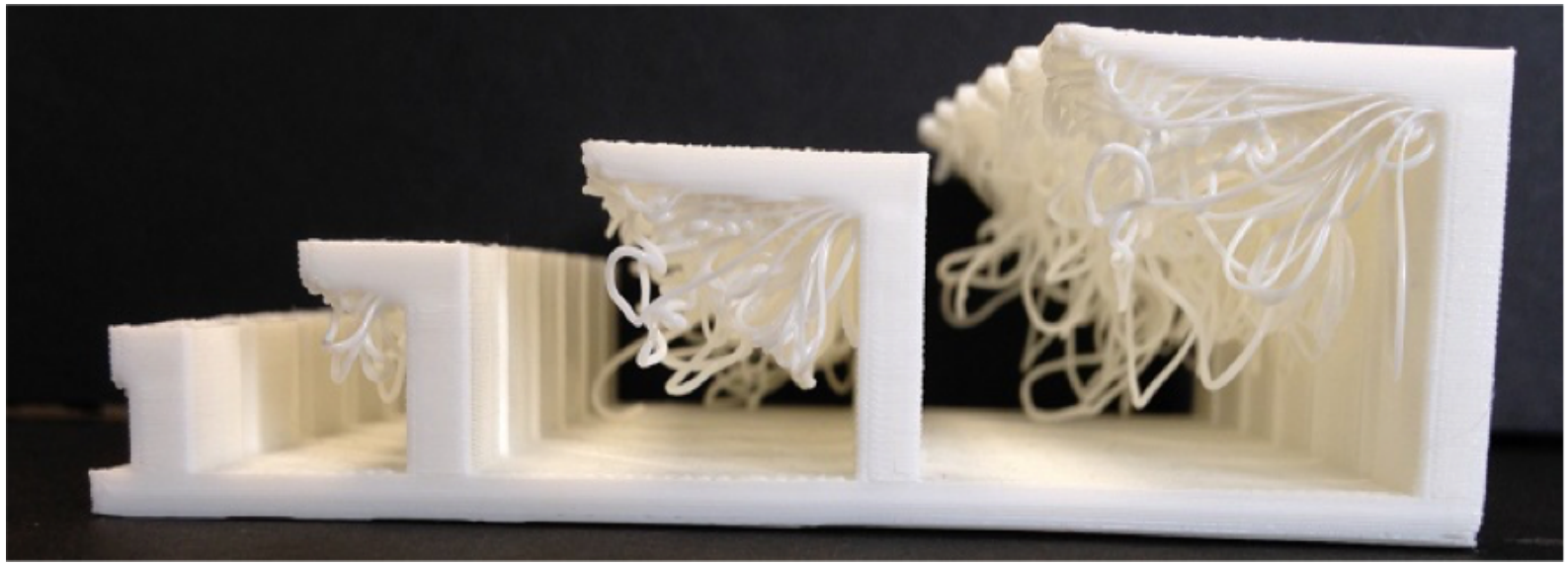


I SHOULD HAVE USED SUPPORTS ON THAT 3D PRINT...

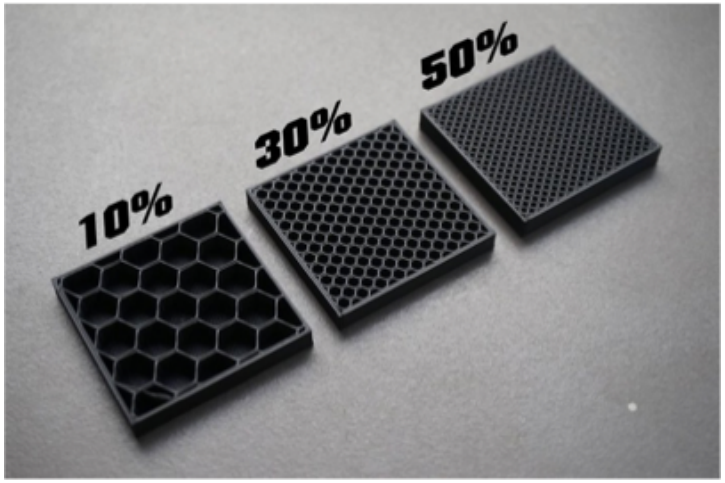
10%
30%
50%

3D Printing Concepts

Tolerance	Maximum size	Overhang
• This is how different parts fit together. Tolerance is important, because in a 3D print, such as a ball joint, you will need to make sure the joint is precise and fits snugly.	• needs to be broken down into smaller pieces, which can then be fit back together.	• When printing an overhang, it is important to keep in mind that there are limits to a self supporting overhang. Typically, if the Overhang starts to droop at 1-2cm. • Using support material is a good idea if the overhang is more than 1-2cm

3D Printing Concepts

Bridging	Support	Infill
• Bridging, though it seems a lot like overhang, is different because it's overhang is supported on both sides like a bridge. • Because of this, it has less limitations, but it will still droop if the bridge is far enough apart.	• A removable support is a great solution to overhang and bridging.	• Infill is the Inner structure of the object that is printed. It determines the strength as well as how much filament is used in the object.

3D printing Workflow

There are 6 steps to printing a model.

1. Requirements
2. Getting a CAD file for your model.
3. Export Model from Cad file in .stl format.
4. Prepare Model and Generate g-code for the printer.
5. Print Model.
6. Clean up printed model.

Workflow

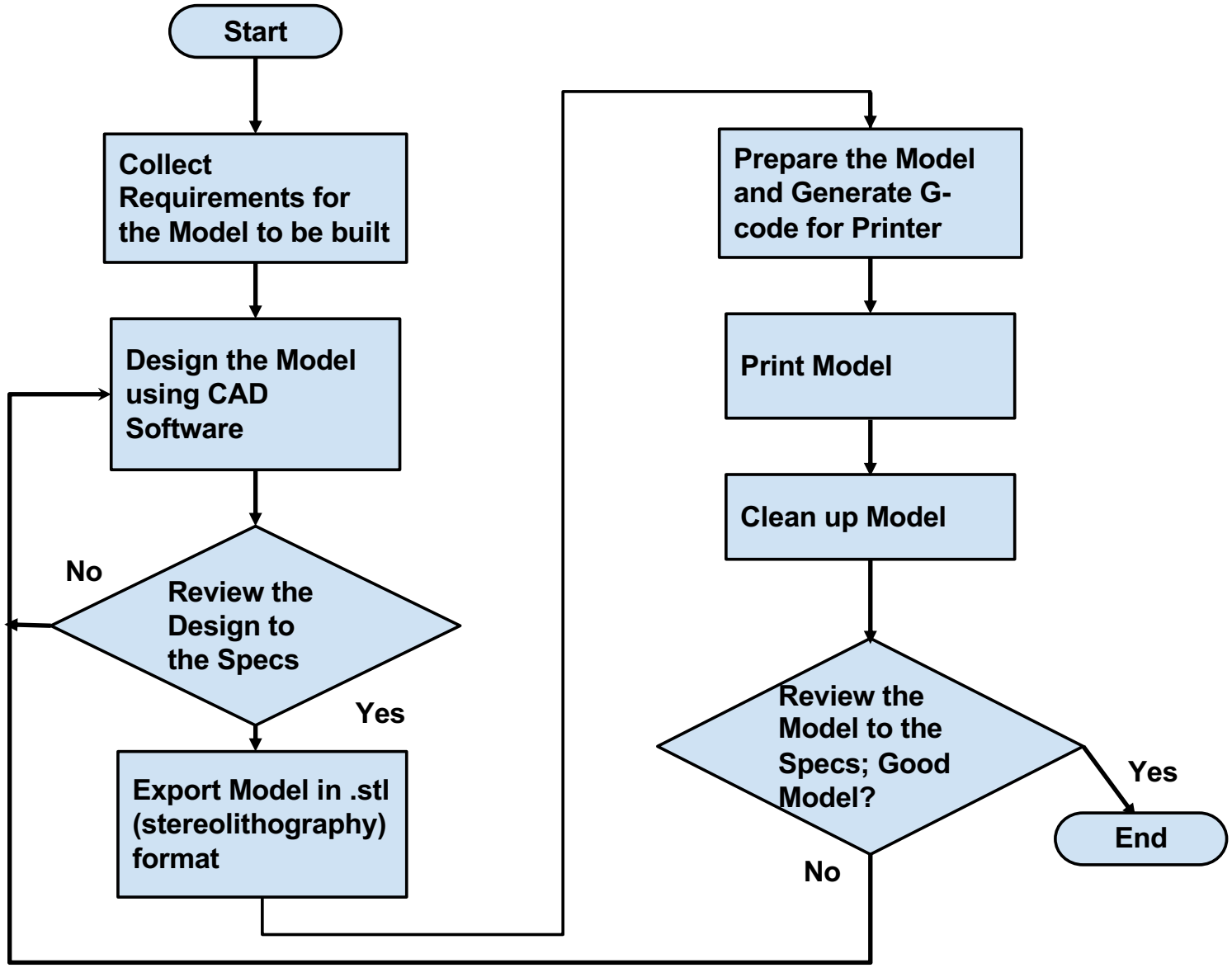
Start
Collect Requirements for the Model to be built
Design the Model using CAD Software
Review the Design to the Specs
No
Yes
Export Model in .stl (stereolithography) format
Prepare the Model and Generate G-code for Printer
Print Model
Clean up Model
Review the Model to the Specs; Good Model?
Yes
No
End

Requirements

The Requirements of the model are the lengths that it needs to be.

1. The First step for Requirements is taking measurements of the part you want the model to attach to.
2. Next you need to create a sketch of the model on paper.

Getting a CAD file for the model

The process of the 3D printing a part begins with a CAD(Computer aided design) file of the model you want to make. The CAD file can be obtained in three ways.

1. The item can be modeled using PTC Creo or Autodesk.
2. A 3D scanner can scan real life objects and create an identical model.
3. You can get a model on Thingiverse.

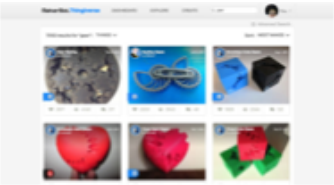

CAD software:

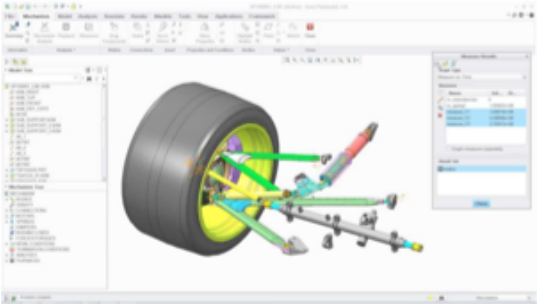

3D Scanner:

Export Model from CAD in .stl format.

- Once you have designed the model, you need to save it in .stl(stereolitography) format.
- Upon doing so, your model will look something like this:

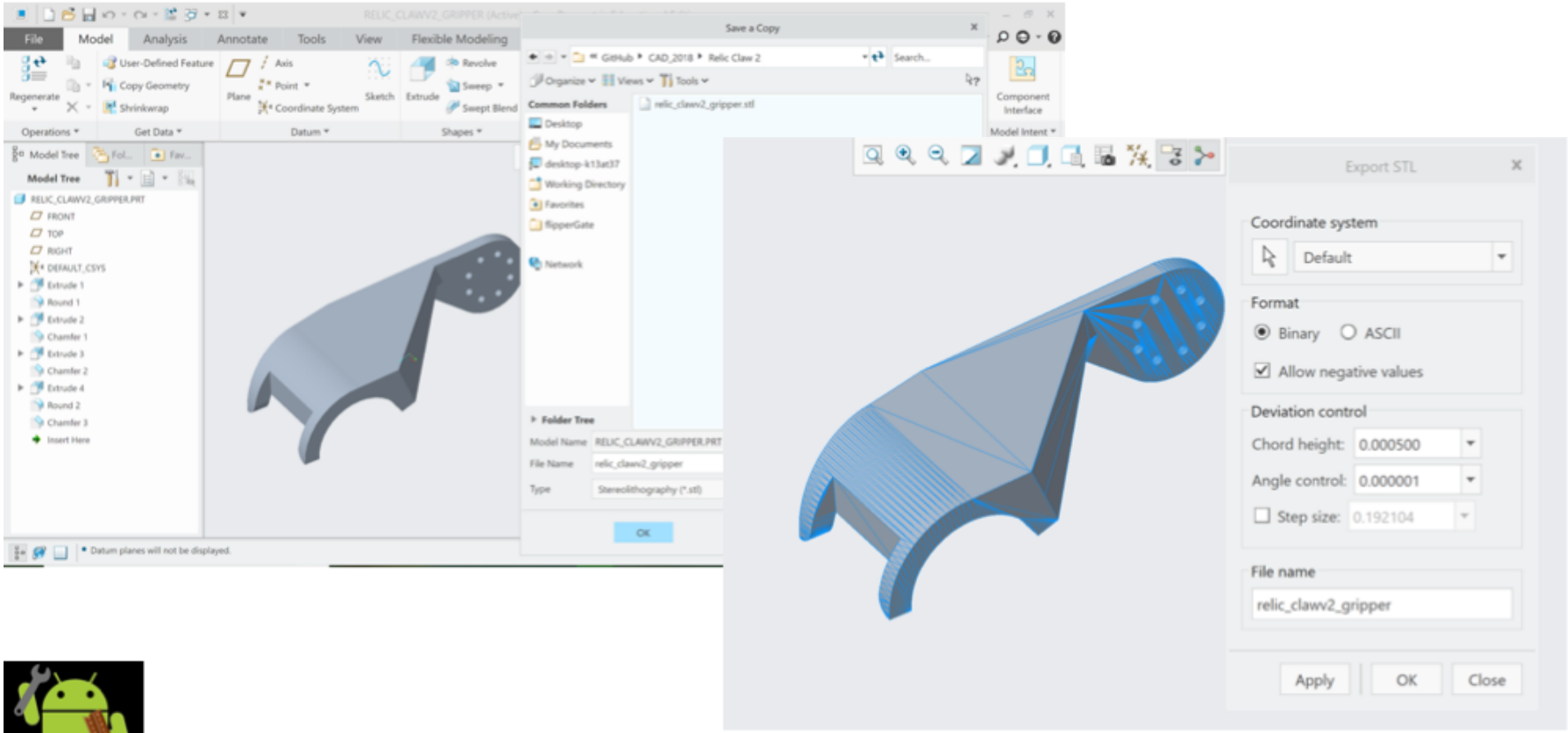

Prepare Model and Generate g-code for the printer.

- Slicer slices model into thousands of layers, which is translated into g-code
- G-code tells printer's motors when to move and how to move.
- I use Simplify3D for 3D printing software. Simplify3D :

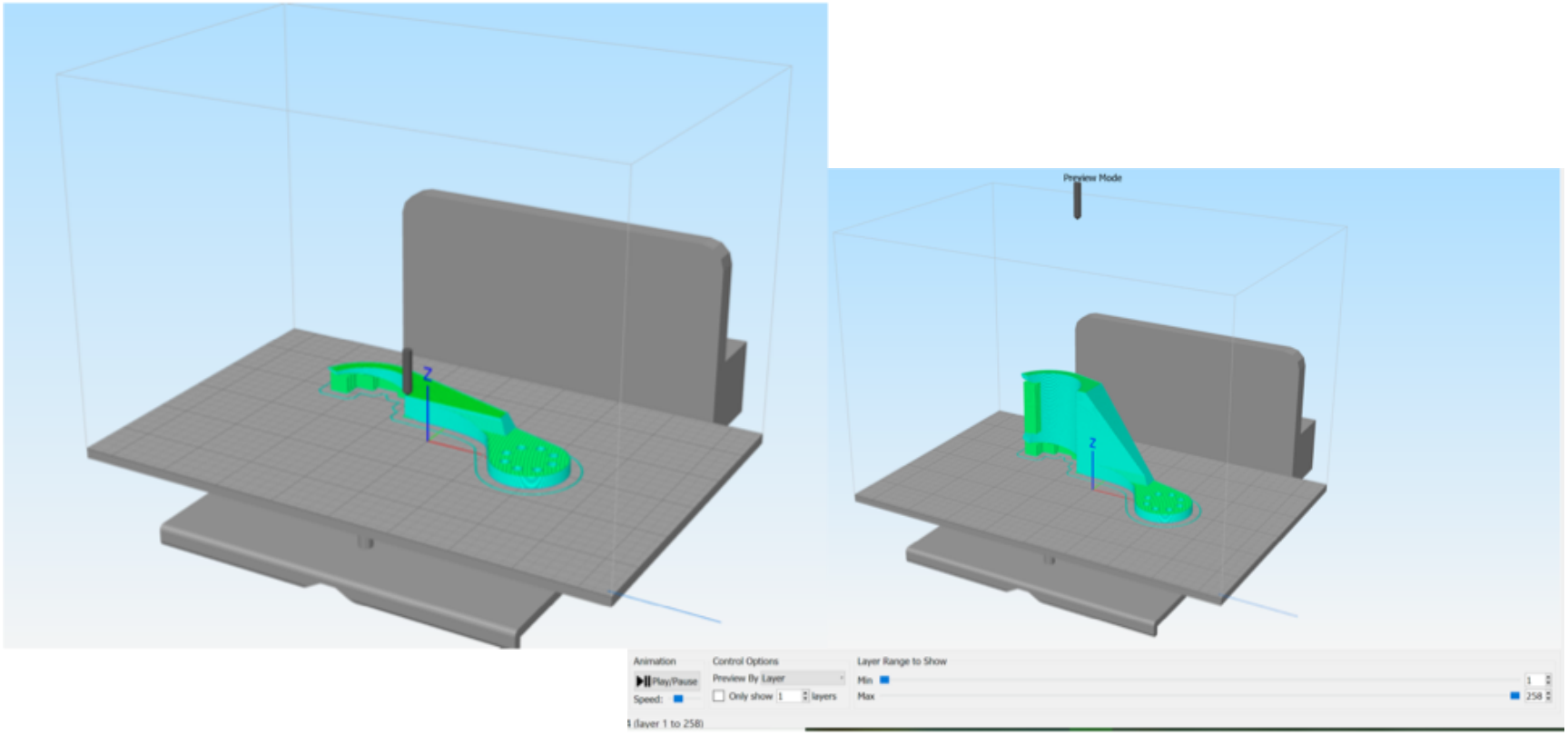

Print Model

- As simple as hitting the “print button”.
- 3D printer will print the model layer by layer.

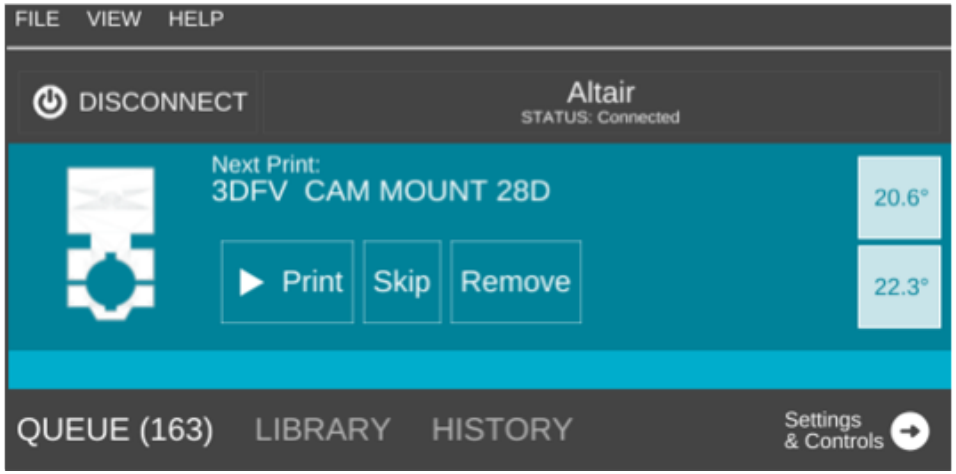

Clean up printed model

- Cleaning support material
- Filing away loose pieces of plastic

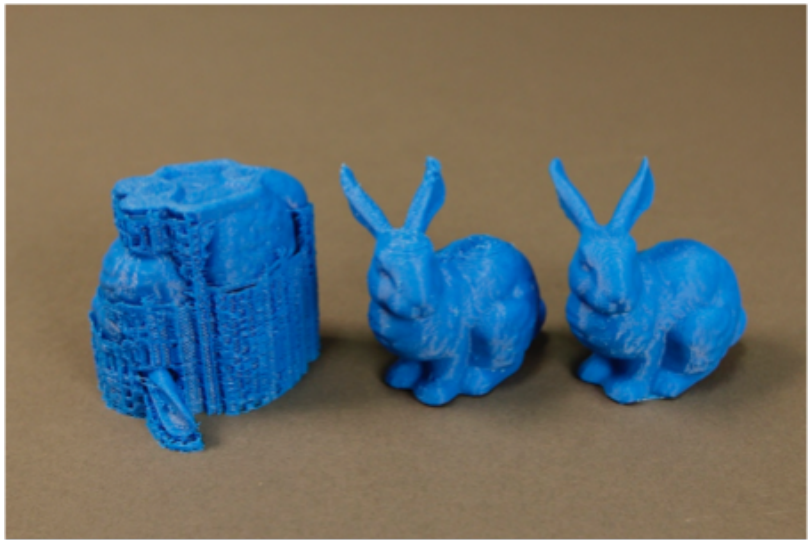

Making changes to the Model

- Model has flaw, process repeats until model is perfect

1: Getting a CAD file for your model.
2: Export Model from Cad file in .stl format.
3: Prepare Model and Generate g-code for the printer.
4: Print Model.
5:Clean up printed model.

Filament Properties

3D Printer Filament	Easy to Use	Physical Properties		
		Strength	Flexibility	Durability
PLA	YES			
ABS				
PETG (PET, PETT)				
Nylon				
TPE, TPU, TPC (Flexible)				
PC				

Some interesting facts

- In China, a group of 3D printers printed 10 houses in just one day.
- Doctors have created body parts with 3d printing by using a patient's cells.
- Doctors have also tested 3D printed organs in transplants.
- 3D printed food is real.

3D printing in FTC

- In FTC we have to build a robot to solve a set of missions while competing with other teams.
- In building our robot we have to designing custom parts for it.
- We can design custom parts with plastic and use them in our robot.
- We have 3D printed
  - Sprockets
  - Spacers
  - Servo Mount
  - Phone mount
  - USB wire management holders

3D printing Advantages in FTC

- You can confirm the validity of a 3D printed part before ordering from the manufacturers' catalog.
- 3D printing can be used to test parts and make necessary design changes quickly.
- 3D printing is cheaper and quicker than ordering parts online, paying for shipping, and waiting for parts to arrive in the mail.

Left Panel:

What is 3D printing

Concepts

Concepts

Center Panel: Title, 3D Printer, Workflow, Workflow Explained (2 Slides)

Right Panel: Materials, FTC (Phone mount, sprockets, spacer, wire organizers), Advantages of FTC